# Da-Tor: cold forming of steel nuts and unions

**Davide Longhi, Giovanni Rocca; DA-TOR S.p.A.**
**Marcello Gabrielli, Piero Parona; EnginSoft S.p.A.**

It is a fact that the cold forming sector is suffering from increasingly heavy competition from manufacturers in emerging markets and the rising prices of raw materials.

The key to achieving considerable and appreciable improvements in product quality lies in the adoption of the most advanced technologies available. By investing in a cutting edge software product like Transvalor's ColdForm, a numerical simulation tool for cold forming, companies can quickly optimize their product designs and production processes while reducing wastage of raw materials and ultimately bringing their products to market faster and at lower overall costs.

### ColdForm, the finite element analysis tool devoted to cold forming

Forge® is well known as one of the most precise, reliable and user-friendly software tools for the simulation of metal forming. ColdForm® is a "light" version of Forge, limited to the cold forming processes for hardware fasteners, bolts, screws and other small metal parts. It brings with it the same level of quality and reliability of Forge to a subset of the metal forming market. ColdForm allows the simulation of cold forming processes of metallic materials in both 2D and 3D, with automatic multi-station mechanical presses, knuckle-joint and hydraulic presses.

Forge and ColdForm are produced by Transvalor S.A. and distributed in Italy and the USA by EnginSoft.

### DA-TOR and ColdForm - a success story

DA-TOR S.p.A, an Italian company with its production unit in Beverate di Brivio (LC) Italy, is a modern manufacturing company that prides itself in its dynamism and versatility. Its core business is the manufacturing of small fastening elements for the automotive industry: normal and nylon flanged self-locking nuts, milled box nuts, unions, and custom parts.

A-TOR, anxious to remain a competitive player in the market, recently chose ColdForm to assist it in improving its productivity and quality. DA-TOR recognized the potential of ColdForm after running a series of simulation tests on some of its existing parts with the expert assistance of EnginSoft engineers. The simulation results were then compared with the measurements obtained from currently produced products. This article touches upon some of the results that the company achieved in just their first week of using the ColdForm software.

### Steel union – problem definition and motive for the analysis

The first part that was examined with ColdForm was a Hex M26 nut. This part is produced using a four-station automatic press. The scope of this analysis was to accurately replicate the die filling routines at each station in order to evaluate the quality of the part. The objective was not just to guarantee that the finished product respects the defect tolerance standards dictated by the customer, but to try to produce the part free from forming defects such as surface cracking

*Figure 1 - Union – Actual piece*


All trademarks or registered trademarks are the property of their respective owners.

and laps that are commonly known to occur in this type of component. The die geometries for the four-station operation, created by DA-TOR using 3D AutoCAD Inventor, were transferred into ColdForm in the STEP file format. The starting slug was a 0.07 kilos CB4FF steel piece, whose characteristics were extracted from the ColdForm FPD database. This database includes all the cold deformation curves of more than 200 ferrous and non-ferrous alloys: the definition of all the materials and their sensitivity up to the minimum heat variation allows a correct prediction of the metal deformation. To simulate the die movement, the parameters of the four station automatic mechanical press were configured within the specific ColdForm model, in accordance with the customer's specifications.

Different parameters were evaluated at each step: material deformation between the dies, heating of the part due to pressure and friction, cooling due to die contact as well as the springback passing from one stage to the following one. The result of each step (temperature and residual stress distribution) was used as a starting condition for the next step, so as to achieve a final result that took into account the complete deformation process resulting from the entire forming process.

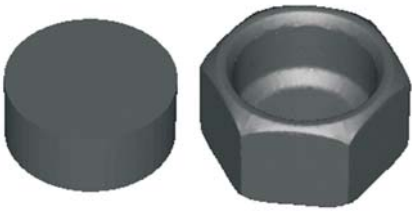

*Figure 2 - Union – Simulated piece*

## Steel union – the results obtained with ColdForm

The forming sequence obtained with ColdForm (Figure 2 – starting slug and finished piece) shows how the software is able to accurately reproduce the process. The contact analysis

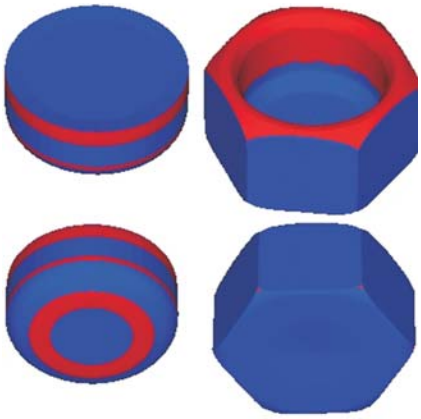

*Figure 3 - Union – Contact surfaces*

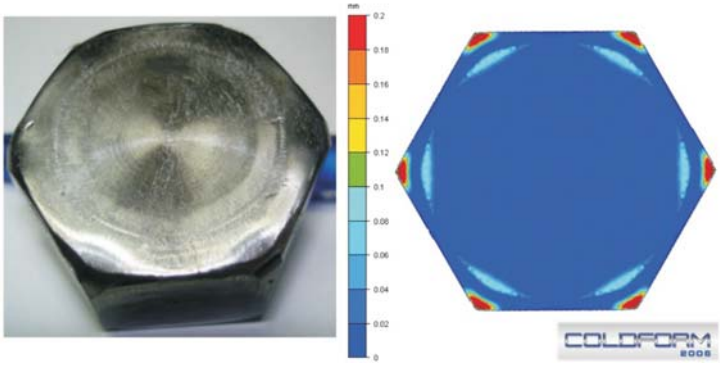


*Figure 4 - Union- Laps on the outer and inner edge of the bottom surface*

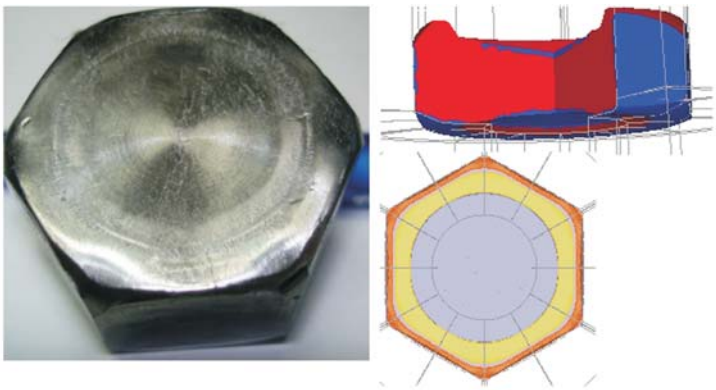

*Figure 5 - Union – Poor surface polishing at the center of the bottom surface*

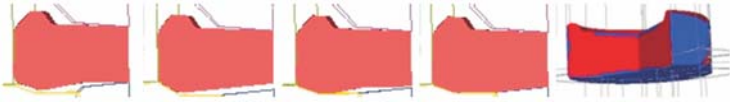

*Figure 6 - Union – Different versions of the preformed*

(Figure 3), with the laps marked in red, enables the engineer to precisely estimate the material flow and to understand the reasons for the formation of the surface defects that are noticed in the actual process at the end of the fourth phase.
The simulation results illustrated some commonly know issues such as the laps on the outer edges of the bottom surface of the nut, which are due to the hex shape itself, but also highlighted some smaller laps generated on the inner side of the surface during the material backward extrusion (Figure 4).
In addition to these defects that are visible to the naked eye, the analysis of the material flow showed poor surface polishing at the centre of the nut bottom surface (Figure 5).


All trademarks or registered trademarks are the property of their respective owners.

A die filling analysis showed indeed that there was an isolated spot on the bottom surface where the lubricant tended to gather. The material grain flow moved this spot to the surface: the use of marking-grids made it possible to follow the displacement and to highlight the location of the defect. In order to solve this problem, different versions of the preformed were tried (Figure 6).These were generated by modifying the previous operation. These versions were tested to find which one best matched the final form to be produced.

In the same way – using contact analysis plus marking-grids - other defects were analysed, such as some surface defects on the hexagonal sides, as well as light wrinkling on the nut inner surfaces, due to the material detached by the punch (Figure 7).

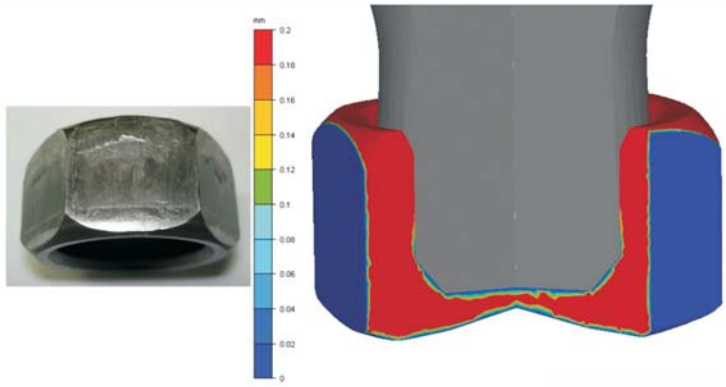

*Figure 7 - Union – Surface polishing on the nut hexagonal panes*

Once the forming problems had been sorted out and the desired quality of the part had been achieved, a piercing analysis was carried out (Figure 8).

The progressive fracture during the advancing of the piercing punch was then simulated. The results obtained showed a good correspondence with what happens in the actual production process.

In a nutshell: this part was showing a series of surface defects and laps whose origin hadn't been precisely identified up until that moment. The simulation carried out with ColdForm showed the reasons for the defects and the process phases in which they arose: the modification of the third operation eliminated these defects and enabled the realization of a part that met the required quality standards.

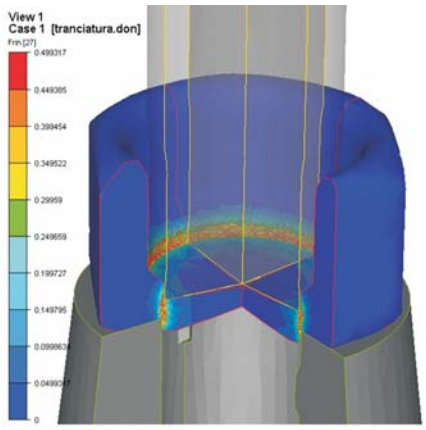


*Figure 8 - Union – Piercing*

### Nylon to metal snap-fit – technical overview

The second problem described here is the insertion of a nylon washer into the hex nut, by bending of the upper part of the nut's thin wall (Figure 9). The reason for this simulation was to guarantee a correct snap-fit, and to determine the most suitable die design for this purpose.

The simulation performed used different top die designs (each with different curvature – see Figure 10) to verify the quality of the snap-fit coupling between nylon and metal.

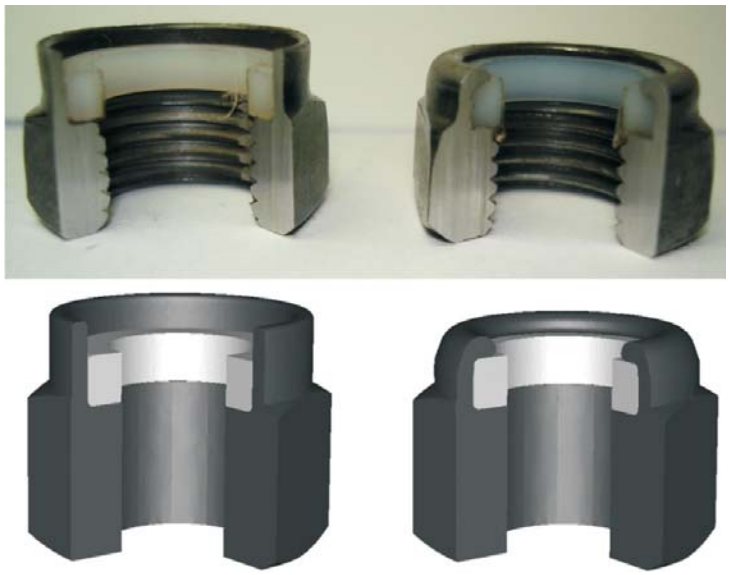

*Figure 9 - Nylon to metal snap-fit – Real and simulated*


All trademarks or registered trademarks are the property of their respective owners.

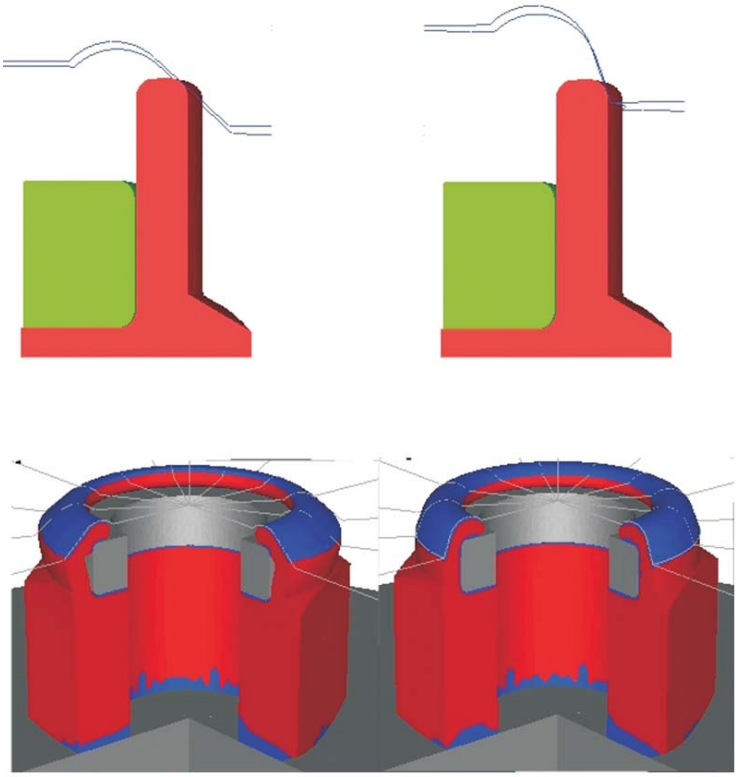

*Figure 10 - Upper Die designs with different curvature*

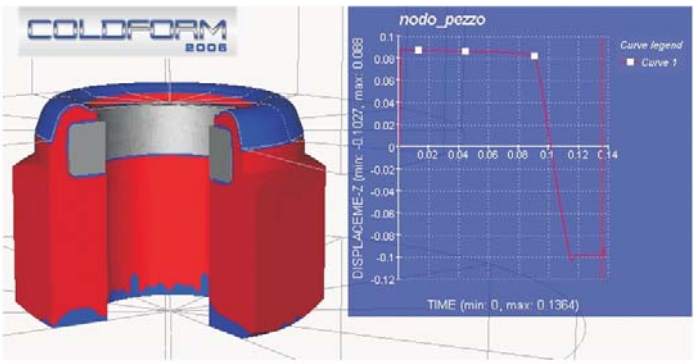


*Figure 11 - Nylon washer total vertical displacement*

The vertical displacement of the nylon washer was also checked using some of ColdForm sensors and this showed an excellent correspondence with experimental data.
It is noteworthy that this operation used to be carried out by manually adjusting the press total stroke in order to obtain a nut with the required height, disregarding the quality of the snap-fit itself.

The analysis carried out with ColdForm allowed engineers to explore different configurations in order to achieve an optimal snap-fit enforcement and therefore the best coupling performance between these two components.

### Conclusions – the advantages of the ColdForm approach in DA-TOR S.p.A.

The experience that DA-TOR technicians are acquiring in the use of numerical simulation with ColdForm is having notable implications on the quality of the company's production process.
Thanks to the use of simulation, DA-TOR's general manager Giovanni Rocca has identified the following advantages of ColdForm:

1. its ability to check the material flow through contact analysis and the evaluation of die filling, resulting in the highlighting of defects such as laps and other surface defects;
2. its ability to "virtually" explore new designs, saving both time and money otherwise necessary for the creation and the replacement of a die
3. the ability to propose a new virtual design before production starts
4. the ability to verify innovative solutions, enabling higher product quality
5. the ability to verify the total power required for each operation, in order to choose the correct press and avoid press overloading
6. the ability to avoid early die wear, so as to have a standard die replacement schedule

The application of the ColdForm simulation approach to all kinds of hardware fastener products will allow DA-TOR to create a complete database of simulation results. This will result in higher quality production, less machining required, faster lead times and lower manufacturing costs.


All trademarks or registered trademarks are the property of their respective owners.